# Work Order ID 91895

*91895*



*October-19-12 1:06:36 PM*

47.0 4M

**Item ID:** 647.2010 **Accept** *N900040100* **Setup Start** *NS1*

**Revision ID:** **Stop** *NS2*

**Item Name:** Strut

**Start Date:** 10/18/12 **Start Qty:** 45.00 *45* **Cust Item ID:**

**Required Date:** 11/09/12 **Req'd Qty:** 45.00 *45* **Customer:**

**Reference:**

**Run Start** *NR1*

**Approvals:** **Process Plan:** MCS **Date:** 12-10-22 **Tooling:** **Date:**

**QC:** **Date:** **SPC (Y/N):** **Date:** **Stop** *NR2*

| Sequence ID/ Work Center ID | Operation Description | Set Up/ Run Hours | Tool ID | Tool # | Plan Code | Accept Qty | Reject Qty | Reject Number | Insp. Stamp |
|---|---|---|---|---|---|---|---|---|---|
| **Draw Nbr** | **Revision Nbr** | | | | | | | | |
| 647.2600 | N/C | | | | | | | | |
| 110 | | 0.00 | | | | 47 | 0 | | |
| *110* | | | | | | | | | |
| Doosan | **Memo** | 0.00 | | | | | | | |
| Doosan Lathe | TURN AS PER DWG<br>DWG REV: N/C<br>FOLIO REV: N/A<br><br>DEBURR | | | | | | | | |
| 120 | QC2- Inspect parts off machine FAI/FAIB | 0.00 | | | | 47 | 0 | | |
| *120* | | | | | | | | | |
| QC | **Memo** | 0.00 | | | | | | | |
| Quality Control | | | | | | | | | |

DQA: _____ Date: _____

NCR: Yes / No

# WORK ORDER NON-CONFORMANCE / UPDATE

QA Closed: Date:

Work Order: _____

Part No. _____

NCR No. _____

**DISPOSITION**

- Rework ☐
- Scrap ☐
- Use-as-is ☐
- Work Order Update ☐

**AGAINST DEPARTMENT/PROCESS**

- Skid-tube ☐
- Machining ☐
- Thermoforming ☐
- Large Fab ☐
- Crosstube ☐
- Small Fab ☐
- Finishing ☐
- Composite ☐
- Water Jet ☐
- Prod. Eng. Coor. ☐
- Rec/Store/Packaging ☐
- Supplier ☐
- Engineering ☐
- Quality ☐
- Other ☐
- ☐

| Root Cause | | Date | Step | Qty | Description of work order update or Non-conformance | Initial Chief Eng | Action Description | Sign & Date | Verification | QC Inspector |
|---|---|---|---|---|---|---|---|---|---|---|
| Doc/Data | ☐ | | | | | | | | | |
| Equip/Tooling | ☐ | | | | | | | | | |
| Operator | ☐ | | | | | | | | | |
| Material | ☐ | | | | | | | | | |
| Setup | ☐ | | | | | | | | | |
| Other | ☐ | | | | | | | | | |
| Process | ☐ | | | | | | | | | |
| Supplier | ☐ | | | | | | | | | |
| Training | ☐ | | | | | | | | | |
| Unapproved | ☐ | | | | | | | | | |

**FAULT CATEGORY**

**Landing Gear**

- ☐ Bending
- ☐ Centre Not Concentric to O/S
- ☐ Cracks
- ☐ Crushed/Crimped
- ☐ Cuffs
- ☐ Heat Treat
- ☐ Inspection Strip in Tube
- ☐ Ripples in Bend
- ☐ Torque Waves in Extrusion
- ☐ Turning Sequence
- ☐ Wave/Twist in Tube

**General**

- ☐ Bend
- ☐ BOM/Route
- ☐ Broken/Damaged
- ☐ Burrs
- ☐ Contamination
- ☐ Countersink
- ☐ Cut Too Short
- ☐ Drill Holes
- ☐ Drawing
- ☐ Finish
- ☐ Folio
- ☐ Grain
- ☐ Hardware
- ☐ Inspection Incomplete
- ☐ Instructions Incomplete/Unclear
- ☐ Maintenance
- ☐ Mislabeled
- ☐ Misread
- ☐ Offset
- ☐ Out of Calibration
- ☐ Out of Sequence
- ☐ Outside Dimensions
- ☐ Ovalized
- ☐ Over/Under tolerance
- ☐ Part Incorrect
- ☐ Part Lost/Missing
- ☐ Part Moved
- ☐ Positioned Wrong
- ☐ Power Loss/Surge
- ☐ Pressure/Forced
- ☐ Temperature/Cure
- ☐ Weld
- ☐ Wrong Stock Pulled
- ☐ Other

_____

_____

_____

# Work Order ID 91895

*91895*

*October-19-12 1:06:36 PM*

**Item ID:** 647.2010 **Accept** *N900040100* **Setup Start** *NS1*
**Revision ID:** **Stop** *NS2*
**Item Name:** Strut

**Start Date:** 10/18/12 **Start Qty:** 45.00 *45*
**Required Date:** 11/09/12 **Req'd Qty:** 45.00 *45*
**Reference:**

**Cust Item ID:**
**Customer:**

**Run Start** *NR1*
**Stop** *NR2*

**Approvals:** **Process Plan:** _____ **Date:** _____ **Tooling:** _____ **Date:** _____
**QC:** _____ **Date:** _____ **SPC (Y/N):** _____ **Date:** _____

| Sequence ID/ Work Center ID | Operation Description | Set Up/ Run Hours | Tool ID | Tool # | Plan Code | Accept Qty | Reject Qty | Reject Number | Insp. Stamp |
|---|---|---|---|---|---|---|---|---|---|
| 170 | QC8- Inspect parts - second check | 0.00 | | | | | | | |
| *170* QC Quality Control | Memo | 0.00 | DAS 14 9-89 | 12/10/29 | | 47 | 0 | | |
| 171 | Acid Etch only and clean off all marking. | | | | | 47 | 47 12/10/31 | | |
| 180 | | 0.00 | | | | | | | |
| *180* Purchasing Purchasing | PURCHASING | | | | | | | | |
| | Memo Issue P/O: 18295 | 0.00 ANODIZE AS PER DWG | | | | | | | |
| | | | | | | 12/10/31 | 47 | | |
| 190 | Receive & Inspect for Damage & Mat'l Certs | 0.00 | | | | | | | |
| *190* Packaging Packaging | Memo Ensure certificate of conformity is attached | 0.00 | | | | | | | |
| | | | | | | 47 | | | |

DQA: _____ Date: _____

NCR: Yes / No

# WORK ORDER NON-CONFORMANCE / UPDATE

QA Closed: Date:

Work Order: _____

Part No. _____

NCR No. _____

**DISPOSITION**

- Rework ☐
- Scrap ☐
- Use-as-is ☐
- Work Order Update ☐

**AGAINST DEPARTMENT/PROCESS**

- Skid-tube ☐
- Machining ☐
- Thermoforming ☐
- Large Fab ☐
- Crosstube ☐
- Small Fab ☐
- Finishing ☐
- Composite ☐
- Water Jet ☐
- Prod. Eng. Coor. ☐
- Rec/Store/Packaging ☐
- Supplier ☐
- Engineering ☐
- Quality ☐
- Other ☐

| Root Cause | | Date | Step | Qty | Description of work order update or Non-conformance | Initial Chief Eng | Action Description | Sign & Date | Verification | QC Inspector |
|---|---|---|---|---|---|---|---|---|---|---|
| Doc/Data | ☐ | | | | | | | | | |
| Equip/Tooling | ☐ | | | | | | | | | |
| Operator | ☐ | | | | | | | | | |
| Material | ☐ | | | | | | | | | |
| Setup | ☐ | | | | | | | | | |
| Other | ☐ | | | | | | | | | |
| Process | ☐ | | | | | | | | | |
| Supplier | ☐ | | | | | | | | | |
| Training | ☐ | | | | | | | | | |
| Unapproved | ☐ | | | | | | | | | |

## FAULT CATEGORY

**Landing Gear**

- ☐ Bending
- ☐ Centre Not Concentric to O/S
- ☐ Cracks
- ☐ Crushed/Crimped
- ☐ Cuffs
- ☐ Heat Treat
- ☐ Inspection Strip in Tube
- ☐ Ripples in Bend
- ☐ Torque Waves in Extrusion
- ☐ Turning Sequence
- ☐ Wave/Twist in Tube

**General**

- ☐ Bend
- ☐ BOM/Route
- ☐ Broken/Damaged
- ☐ Burrs
- ☐ Contamination
- ☐ Countersink
- ☐ Cut Too Short
- ☐ Drill Holes
- ☐ Drawing
- ☐ Finish
- ☐ Folio
- ☐ Grain
- ☐ Hardware
- ☐ Inspection Incomplete
- ☐ Instructions Incomplete/Unclear
- ☐ Maintenance
- ☐ Mislabeled
- ☐ Misread
- ☐ Offset
- ☐ Out of Calibration
- ☐ Out of Sequence
- ☐ Outside Dimensions
- ☐ Ovalized
- ☐ Over/Under tolerance
- ☐ Part Incorrect
- ☐ Part Lost/Missing
- ☐ Part Moved
- ☐ Positioned Wrong
- ☐ Power Loss/Surge
- ☐ Pressure/Forced
- ☐ Temperature/Cure
- ☐ Weld
- ☐ Wrong Stock Pulled
- ☐ Other _____

**Item ID:** 647.2010 **Accept** *N900040100* **Setup Start** *NS1*
**Revision ID:** **Stop** *NS2*
**Item Name:** Strut

**Start Date:** 10/18/12 **Start Qty:** 45.00 *45*
**Required Date:** 11/09/12 **Req'd Qty:** 45.00 *45*
**Reference:**

**Cust Item ID:**
**Customer:**

**Approvals:** **Process Plan:** _____ **Date:** _____ **Tooling:** _____ **Date:** _____
**QC:** _____ **Date:** _____ **SPC (Y/N):** _____ **Date:** _____

**Run Start** *NR1*
**Stop** *NR2*

| Sequence ID/ Work Center ID | Operation Description | Set Up/ Run Hours | Tool ID | Tool # | Plan Code | Accept Qty | Reject Qty | Reject Number | Insp. Stamp |
|---|---|---|---|---|---|---|---|---|---|
| 200 *200* QC Quality Control | QC5- Inspect part completeness to step on W/O<br>**Memo** | 0.00<br>0.00 | | | | (47) cuts | | | |
| 201 *201* SprayPaint Spray Painting | **Memo** PRIME AS PER DWG<br>CARDINAL 4860-50 PRIMER BATCH: 123693 | 0.00<br>0.00 | | | | 47 | Ø | Ø | |
| 203 *203* QC Quality Control | QC14- Inspect Spray Paint<br>**Memo** | 0.00<br>0.00 | | | | 47 | | | |

DAS 16 12/11/15
AS 12-12-16
DAS 05 12-12-18

DQA: _____ Date: _____

NCR: Yes / No

# WORK ORDER NON-CONFORMANCE / UPDATE

QA Closed: Date:

Work Order: _____

Part No. _____

NCR No. _____

**DISPOSITION**

- Rework ☐
- Scrap ☐
- Use-as-is ☐
- Work Order Update ☐

**AGAINST DEPARTMENT/PROCESS**

- Skid-tube ☐
- Machining ☐
- Thermoforming ☐
- Large Fab ☐
- Crosstube ☐
- Small Fab ☐
- Finishing ☐
- Composite ☐
- Water Jet ☐
- Prod. Eng. Coor. ☐
- Rec/Store/Packaging ☐
- Supplier ☐
- Engineering ☐
- Quality ☐
- Other ☐

| Root Cause | | Date | Step | Qty | Description of work order update or Non-conformance | Initial Chief Eng | Action Description | Sign & Date | Verification | QC Inspector |
|---|---|---|---|---|---|---|---|---|---|---|
| Doc/Data | ☐ | | | | | | | | | |
| Equip/Tooling | ☐ | | | | | | | | | |
| Operator | ☐ | | | | | | | | | |
| Material | ☐ | | | | | | | | | |
| Setup | ☐ | | | | | | | | | |
| Other | ☐ | | | | | | | | | |
| Process | ☐ | | | | | | | | | |
| Supplier | ☐ | | | | | | | | | |
| Training | ☐ | | | | | | | | | |
| Unapproved | ☐ | | | | | | | | | |

## FAULT CATEGORY

**Landing Gear**

- ☐ Bending
- ☐ Centre Not Concentric to O/S
- ☐ Cracks
- ☐ Crushed/Crimped
- ☐ Cuffs
- ☐ Heat Treat
- ☐ Inspection Strip in Tube
- ☐ Ripples in Bend
- ☐ Torque Waves in Extrusion
- ☐ Turning Sequence
- ☐ Wave/Twist in Tube

**General**

- ☐ Bend
- ☐ BOM/Route
- ☐ Broken/Damaged
- ☐ Burrs
- ☐ Contamination
- ☐ Countersink
- ☐ Cut Too Short
- ☐ Drill Holes
- ☐ Drawing
- ☐ Finish
- ☐ Folio
- ☐ Grain
- ☐ Hardware
- ☐ Inspection Incomplete
- ☐ Instructions Incomplete/Unclear
- ☐ Maintenance
- ☐ Mislabeled
- ☐ Misread
- ☐ Offset
- ☐ Out of Calibration
- ☐ Out of Sequence
- ☐ Outside Dimensions
- ☐ Ovalized
- ☐ Over/Under tolerance
- ☐ Part Incorrect
- ☐ Part Lost/Missing
- ☐ Part Moved
- ☐ Positioned Wrong
- ☐ Power Loss/Surge
- ☐ Pressure/Forced
- ☐ Temperature/Cure
- ☐ Weld
- ☐ Wrong Stock Pulled
- ☐ Other _____

**Item ID:** 647.2010 **Accept** *N900040100* **Setup Start** *NS1*
**Revision ID:** **Stop** *NS2*
**Item Name:** Strut

**Start Date:** 10/18/12 **Start Qty:** 45.00 *45*
**Required Date:** 11/09/12 **Req'd Qty:** 45.00 *45*
**Reference:**

**Cust Item ID:**
**Customer:**

**Run Start** *NR1*
**Stop** *NR2*

**Approvals:** **Process Plan:** _____ **Date:** _____ **Tooling:** _____ **Date:** _____
**QC:** _____ **Date:** _____ **SPC (Y/N):** _____ **Date:** _____

| Sequence ID/ Work Center ID | Operation Description | Set Up/ Run Hours | Tool ID | Tool # | Plan Code | Accept Qty | Reject Qty | Reject Number | Insp. Stamp |
|---|---|---|---|---|---|---|---|---|---|
| 210 | Identify as per dwg & Stock Location ST-439 | 0.00 | | | | 47 | | | |
| *210* | | | | | | | | | |
| Packaging | **Memo** | 0.00 | | | | | | | |
| Packaging | ***IDENTIFY AS PER APICAL MPP-120 BY STAMPING P# AND REV*** | | | | | | | | |
| 220 | QC21- Final Inspection - Work Order Release | 0.00 | | | | | 13/1/10 | | |
| *220* | | | | | | | | | |
| QC | **Memo** | 0.00 | | | | | | | |
| Quality Control | | | | | | | | | |

12-12-24.

MF 12-12-27

DQA: _____ Date: _____

NCR: Yes / No

# WORK ORDER NON-CONFORMANCE / UPDATE

QA Closed: Date:

Work Order: _____

Part No. _____

NCR No. _____

**DISPOSITION**

- Rework ☐
- Scrap ☐
- Use-as-is ☐
- Work Order Update ☐

**AGAINST DEPARTMENT/PROCESS**

| | | | | | |
|---|---|---|---|---|---|
| Skid-tube ☐ | Crosstube ☐ | Water Jet ☐ | Engineering ☐ |
| Machining ☐ | Small Fab ☐ | Prod. Eng. Coor. ☐ | Quality ☐ |
| Thermoforming ☐ | Finishing ☐ | Rec/Store/Packaging ☐ | Other ☐ |
| Large Fab ☐ | Composite ☐ | Supplier ☐ | |

| **Root Cause** | | Date | Step | Qty | Description of work order update or Non-conformance | Initial Chief Eng | Action Description | Sign & Date | Verification | QC Inspector |
|---|---|---|---|---|---|---|---|---|---|---|
| Doc/Data | ☐ | | | | | | | | | |
| Equip/Tooling | ☐ | | | | | | | | | |
| Operator | ☐ | | | | | | | | | |
| Material | ☐ | | | | | | | | | |
| Setup | ☐ | | | | | | | | | |
| Other | ☐ | | | | | | | | | |
| Process | ☐ | | | | | | | | | |
| Supplier | ☐ | | | | | | | | | |
| Training | ☐ | | | | | | | | | |
| Unapproved | ☐ | | | | | | | | | |

**FAULT CATEGORY**

**Landing Gear**

- ☐ Bending
- ☐ Centre Not Concentric to O/S
- ☐ Cracks
- ☐ Crushed/Crimped
- ☐ Cuffs
- ☐ Heat Treat
- ☐ Inspection Strip in Tube
- ☐ Ripples in Bend
- ☐ Torque Waves in Extrusion
- ☐ Turning Sequence
- ☐ Wave/Twist in Tube

**General**

- ☐ Bend
- ☐ BOM/Route
- ☐ Broken/Damaged
- ☐ Burrs
- ☐ Contamination
- ☐ Countersink
- ☐ Cut Too Short
- ☐ Drill Holes
- ☐ Drawing
- ☐ Finish
- ☐ Folio
- ☐ Grain
- ☐ Hardware
- ☐ Inspection Incomplete
- ☐ Instructions Incomplete/Unclear
- ☐ Maintenance
- ☐ Mislabeled
- ☐ Misread
- ☐ Offset
- ☐ Out of Calibration
- ☐ Out of Sequence
- ☐ Outside Dimensions
- ☐ Ovalized
- ☐ Over/Under tolerance
- ☐ Part Incorrect
- ☐ Part Lost/Missing
- ☐ Part Moved
- ☐ Positioned Wrong
- ☐ Power Loss/Surge
- ☐ Pressure/Forced
- ☐ Temperature/Cure
- ☐ Weld
- ☐ Wrong Stock Pulled
- ☐ Other

_____

_____

_____

# Picklist Print

*October-19-12 1:06:35 PM*



**Work Order ID:** 91895

**Parent Item:** 647.2010 **Start Date:** 10/18/12 **Required Date:** 11/09/12

**Parent Item Name:** Strut **Start Qty:** 45.00 **Required Qty:** 45.00

**Comments:** IPP REV:A NEW ISSUE 12-10-09 JLM VERIFIED BY:DD

| Component Item ID/ Item Name | Replacement Item ID | Mfg/ Purch | Bin Item | Primary Location | Last Location | Route Seq ID | Unit of Measure | Qty on Hand | Qty per Kit | Total Qty | Qty Issued | Date Issued | Status |
|---|---|---|---|---|---|---|---|---|---|---|---|---|---|
| **M6061T6R0.563**<br>6061-T6 ROUND BAR .563 | | Purchased | No | | | | f | 106.0000 | | **71.052632** | | | |

SD 12/10/27

| Location | Loc Qty | Loc Code |
|---|---|---|
| MAT | 10 | |
| 123218 | 10 | |
| MAT012 | 96 | |
| 123294 | 96 | |

7.5 ft
65 ft
72.5 ft

DQA: _____ Date: _____

NCR: Yes / No

# WORK ORDER NON-CONFORMANCE / UPDATE

QA Closed: Date:

Work Order: _____

Part No. _____

NCR No. _____

**DISPOSITION**

- Rework ☐
- Scrap ☐
- Use-as-is ☐
- Work Order Update ☐

**AGAINST DEPARTMENT/PROCESS**

- Skid-tube ☐
- Machining ☐
- Thermoforming ☐
- Large Fab ☐
- Crosstube ☐
- Small Fab ☐
- Finishing ☐
- Composite ☐
- Water Jet ☐
- Prod. Eng. Coor. ☐
- Rec/Store/Packaging ☐
- Supplier ☐
- Engineering ☐
- Quality ☐
- Other ☐

| Root Cause | | Date | Step | Qty | Description of work order update or Non-conformance | Initial Chief Eng | Action Description | Sign & Date | Verification | QC Inspector |
|---|---|---|---|---|---|---|---|---|---|---|
| Doc/Data | ☐ | | | | | | | | | |
| Equip/Tooling | ☐ | | | | | | | | | |
| Operator | ☐ | | | | | | | | | |
| Material | ☐ | | | | | | | | | |
| Setup | ☐ | | | | | | | | | |
| Other | ☐ | | | | | | | | | |
| Process | ☐ | | | | | | | | | |
| Supplier | ☐ | | | | | | | | | |
| Training | ☐ | | | | | | | | | |
| Unapproved | ☐ | | | | | | | | | |

## FAULT CATEGORY

**Landing Gear**

- ☐ Bending
- ☐ Centre Not Concentric to O/S
- ☐ Cracks
- ☐ Crushed/Crimped
- ☐ Cuffs
- ☐ Heat Treat
- ☐ Inspection Strip in Tube
- ☐ Ripples in Bend
- ☐ Torque Waves in Extrusion
- ☐ Turning Sequence
- ☐ Wave/Twist in Tube

**General**

- ☐ Bend
- ☐ BOM/Route
- ☐ Broken/Damaged
- ☐ Burrs
- ☐ Contamination
- ☐ Countersink
- ☐ Cut Too Short
- ☐ Drill Holes
- ☐ Drawing
- ☐ Finish
- ☐ Folio
- ☐ Grain
- ☐ Hardware
- ☐ Inspection Incomplete
- ☐ Instructions Incomplete/Unclear
- ☐ Maintenance
- ☐ Mislabeled
- ☐ Misread
- ☐ Offset
- ☐ Out of Calibration
- ☐ Out of Sequence
- ☐ Outside Dimensions
- ☐ Ovalized
- ☐ Over/Under tolerance
- ☐ Part Incorrect
- ☐ Part Lost/Missing
- ☐ Part Moved
- ☐ Positioned Wrong
- ☐ Power Loss/Surge
- ☐ Pressure/Forced
- ☐ Temperature/Cure
- ☐ Weld
- ☐ Wrong Stock Pulled
- ☐ Other _____

THE INFORMATION CONTAINED IN THIS DRAWING IS THE SOLE PROPERTY OF APICAL INDUSTRIES ANY REPRODUCTION IN PART OR WHOLE WITHOUT THE WRITTEN PERMISSION OF APICAL INDUSTRIES IS PROHIBITED.

| REVISIONS | | | |
|---|---|---|---|
| REV | DESCRIPTION | DATE | APPROVED |
| | LAST PROTOTYPE REVISION PRI | | N/C |
| N/C | INITIAL RELEASE | 06/02/09 | P. BRAVO |

NOTES:

1. MATERIAL: 6061-T6 ALUMINUM BAR IAW AMS-QQ-A-250/11
2. FINISH: HARD ANODIZE IAW MIL-A-8625 TYPE III, CLASS 2, COLOR BLACK
   CARDINAL 4860-50 PRETREATMENT PRIMER
   PRIME IAW MIL-P-23377J TYPE I CLASS N
4. DEBURR AND BREAK ALL SHARP EDGES
5. IDENTIFY IAW MPP-120

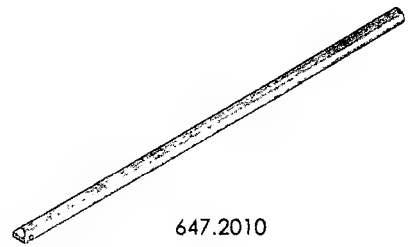

647.2010

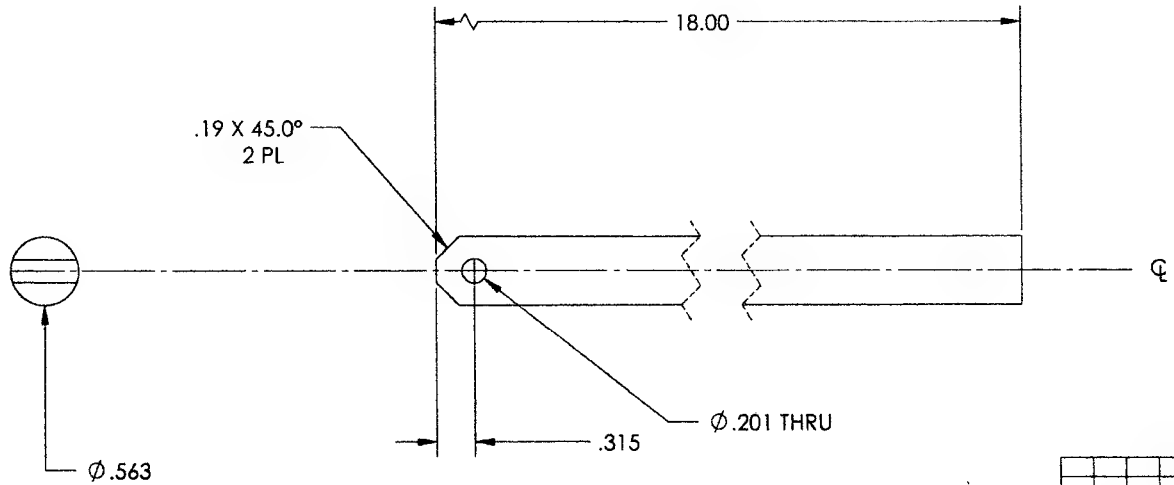


| FIND # | PART # | DESCRIPTION | MAT'L | SPEC. |
|---|---|---|---|---|
| | 647.2011 | LOWER STRUT | 1 | 2 |
| | 647.2010 | UPPER STRUT | 1 | 2 |

PARTS LIST

QTY

NEXT ASSY (S): 647.1300

ORIGINAL DATE (MO-DA-YR): 06-02-09
DRAWN BY: J. GARDNER
CHECKED: P. BRAVO
DRAWING APPROVAL: P. BRAVO 06-02-09
CONTRACT No:

UNLESS OTHERWISE SPECIFIED DIMENSIONS ARE IN INCHES
TOLERANCES ARE
2 PLACE DECIMALS ± .01
3 PLACE DECIMALS ± .005
ANGLES ± 5°

APICAL INDUSTRIES
2608 TEMPLE HEIGHTS DR.
OCEANSIDE, CA. 92056-3512 (760)724-5300

STRUT

| SIZE | CAGE CODE | DWG NO | REV |
|---|---|---|---|
| B | 07MZ6 | 647.2000 | N/C |

SCALE NONE SHEET 1 OF 2

| DART AEROSPACE LTD | Work Order: | 91895 |
|---|---|---|
| Description: Strut | Part Number: | 647.2010 |
| Inspection Dwg: 647.2000 Rev: N/C | | Page 1 of 1 |

## FIRST ARTICLE INSPECTION CHECKLIST

| Drawing Dimension | Tolerance | Actual Dimension | Accept | Reject | Method of Inspection | Comments |
|---|---|---|---|---|---|---|
| Ø.563 | ±.005 | .563 | ✓ | | SA-4 | Vern |
| | | | | | | |
| .19x45° | ±.010/±.5° | .19x45° | ✓ | | | |
| .315 | ±.005 | .314 | | | | |
| Ø.201 | +.005/-.001 | Ø.201 | ✓ | | | |
| | | | | | | |
| 18.00 | ±.010 | 18.005 | ✓ | | A1000 | Vern 24" |
| | | | | | | |
| | | | | | | |
| | | | | | | |
| | | | | | | |
| | | | | | | |
| | | | | | | |
| | | | | | | |
| | | | | | | |
| | | | | | | |
| | | | | | | |
| | | | | | | |
| | | | | | | |
| | | | | | | |
| | | | | | | |
| | | | | | | |
| | | | | | | |

| Measured by: | [signature] | Audited by: | DAS 14 9-89 | Preliminary Approval: | |
|---|---|---|---|---|---|
| Date: | 12/10/27 | Date: | 12/10/29 | Date: | |

| Rev | Date | Change | Revised by | Approved |
|---|---|---|---|---|
| E | 10.04.14 | Added preliminary approval | KJ | |

10.04.15

DQA: _____ Date: _____

NCR: Yes / No

# WORK ORDER NON-CONFORMANCE / UPDATE

QA Closed: Date:

Work Order: _____

Part No. _____

NCR No. _____

**DISPOSITION**

- Rework ☐
- Scrap ☐
- Use-as-is ☐
- Work Order Update ☐

**AGAINST DEPARTMENT/PROCESS**

- Skid-tube ☐
- Machining ☐
- Thermoforming ☐
- Large Fab ☐
- Crosstube ☐
- Small Fab ☐
- Finishing ☐
- Composite ☐
- Water Jet ☐
- Prod. Eng. Coor. ☐
- Rec/Store/Packaging ☐
- Supplier ☐
- Engineering ☐
- Quality ☐
- Other ☐
- ☐

| Root Cause | | Date | Step | Qty | Description of work order update or Non-conformance | Initial Chief Eng | Action Description | Sign & Date | Verification | QC Inspector |
|---|---|---|---|---|---|---|---|---|---|---|
| Doc/Data | ☐ | | | | | | | | | |
| Equip/Tooling | ☐ | | | | | | | | | |
| Operator | ☐ | | | | | | | | | |
| Material | ☐ | | | | | | | | | |
| Setup | ☐ | | | | | | | | | |
| Other | ☐ | | | | | | | | | |
| Process | ☐ | | | | | | | | | |
| Supplier | ☐ | | | | | | | | | |
| Training | ☐ | | | | | | | | | |
| Unapproved | ☐ | | | | | | | | | |

**FAULT CATEGORY**

**Landing Gear**

- ☐ Bending
- ☐ Centre Not Concentric to O/S
- ☐ Cracks
- ☐ Crushed/Crimped
- ☐ Cuffs
- ☐ Heat Treat
- ☐ Inspection Strip in Tube
- ☐ Ripples in Bend
- ☐ Torque Waves in Extrusion
- ☐ Turning Sequence
- ☐ Wave/Twist in Tube

**General**

- ☐ Bend
- ☐ BOM/Route
- ☐ Broken/Damaged
- ☐ Burrs
- ☐ Contamination
- ☐ Countersink
- ☐ Cut Too Short
- ☐ Drill Holes
- ☐ Drawing
- ☐ Finish
- ☐ Folio
- ☐ Grain
- ☐ Hardware
- ☐ Inspection Incomplete
- ☐ Instructions Incomplete/Unclear
- ☐ Maintenance
- ☐ Mislabeled
- ☐ Misread
- ☐ Offset
- ☐ Out of Calibration
- ☐ Out of Sequence
- ☐ Outside Dimensions
- ☐ Ovalized
- ☐ Over/Under tolerance
- ☐ Part Incorrect
- ☐ Part Lost/Missing
- ☐ Part Moved
- ☐ Positioned Wrong
- ☐ Power Loss/Surge
- ☐ Pressure/Forced
- ☐ Temperature/Cure
- ☐ Weld
- ☐ Wrong Stock Pulled
- ☐ Other

_____

_____

_____

Dart Aerospace Ltd.
1270 Aberdeen Street
Hawkesbury, ON K6A 1K7
Tel: 613 632 9577

# ***OUTSTANDING PO REPRINT***

**Purchase Order ID PO18295**
**Purchase Order Date** 10/31/12
**PO Print Date** 11/05/12



**Order From :** VC-ATG001

A.T.G. INDUSTRIES INC.
731 INDUSTRIELLE ROAD
ROCKLAND, ON K4K 1T2
CANADA

| | | | |
|---|---|---|---|
| **Contact Name** | | **Buyer** | Chantal Lavoie |
| **Vendor Phone** | 613-446-4544 | **Requisition Nbr** | |
| **Vendor Fax** | 613-446-4556 | **Tax Resale Nbr** | 10127-2607 |
| **Vendor Account Nbr** | | **Terms** | Net 30 |
| | | **Currency** | CAD |
| | | **FOB** | Destination-Collect |

| Line Nbr | Reference / Revision ID / Vendor Part Number | Description / Mfg ID | Req Date / Taxable | Req Qty | | Unit Price | Extended Price |
|---|---|---|---|---|---|---|---|
| 4 | 91895 | 647.2010 STRUT | 11/09/12 Yes | 47.00 | Dart Truck | $5.9490 | $279.60 |
| | | **Special Inst:** | FINISH: HARD BLACK ANODIZE AS PER IAW MIL-A-8625, TYPE III, CLASS 2 | | **Line Total:** | | **$279.60** |
| 5 | 91802 | 647.2010 STRUT | 11/09/12 Yes | 12.00 | Dart Truck | $5.9490 | $71.39 |
| | | **Special Inst:** | FINISH: HARD BLACK ANODIZE AS PER IAW MIL-A-8625, TYPE III, CLASS 2 | | **Line Total:** | | **$71.39** |

**Outstanding PO Total:** **$672.24**

CERTIFICATE OF CONFORMITY REQ'D UPON DELIVERY

No substitution or deviation without consent.
Certificate of Conformity or Material Certification required - YES NO

**Change Nbr:** 2 **Change Date:** 11/05/12

A.T.G. Industries Inc.
731, rue Industrielle Rd.
PLATING DEPARTMENT
Rockland, On K4K 1T2
Canada
Ph: (613) 446-4544
Fax: (613) 446-4556

# Pack List

Number: 62036 Date: 09-Nov-12

**To**

DART AEROSPACE LTD
1270 ABERDEEN ST.
HAWKESBURY, ON K6A 1K7
Canada

Ph: 613-632-5200 Fax: 613-632-1185

**Ship To**

DART AEROSPACE LTD
1270 ABERDEEN ST.
HAWKESBURY, ON K6A 1K7
Canada

Ph: 613-632-5200 Fax: 613-632-1185

| Terms | Ship Via |
|---|---|
| | |

| Quantity | Description |
|---|---|
| 1 lot | Part: ASST Rev:<br><br>4 PCS 647.1712<br>50 PCS 647.4713<br>~~59 PCS 647.2010~~ 47+12<br><br>HARD ANODIZE BLACK<br>MIL-A-8625 TYPE III CLASS 2<br>Job: 20120687 PO: PO18295 Line: |

Certificate of Conformance

A.T.G. Industries certifies that all items in this shipment are in conformance with all requirements, specifications and drawings referenced in the purchase order.

ISO 9001 : 2008 REGISTERED
ATG SALES-2010 TERMS APPLY

DATE : 9/11/12

CERTIFIED SIGNATURE : MN

RECEIVER SIGNATURE : _____